Profec Nr. 121 Elbow 45° stainless steel 316 1" female thread x male thread 10bar (0081244)

PROFEC

bosta
bringing water to life

TECHNICAL SPECIFICATIONS

Material	stainless steel 316
Connection	female thread x male thread
Fitting nr.	Nr. 121
Pressure	10 bar
Size	1"

DIMENSIONS

ØDi-1	1 "
ØDo-2	1 "
Cb-1	27 mm
Cb-2	43 mm
ß	45 °

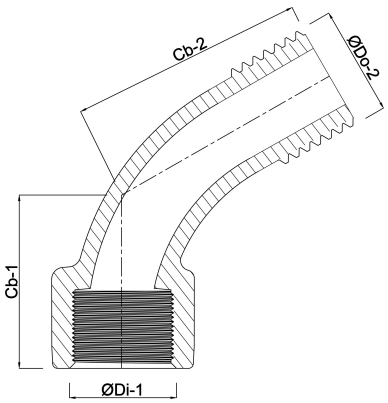

bosta
bringing water to life

Last modified date: 13/02/2026

Bosta UK Ltd.
Reflection House
Olding Road
Bury St. Edmunds
Suffolk
IP33 3TA
T +44 (0) 1284 716580
E enquiries@bosta.co.uk
http://www.bosta.com

bosta
bringing water to life