VDL Cap PVC-U 2" female thread 10bar grey type plain (7002798)

Van de Lande

bosta
bringing water to life

TECHNICAL SPECIFICATIONS

Colour	grey
Type	plain
Material	PVC-U
Material seal	EPDM
Connection	female thread
Size	2"
Pressure	10 bar

DIMENSIONS

ØDi-1	2 "
F-1	23 mm
H	23 mm

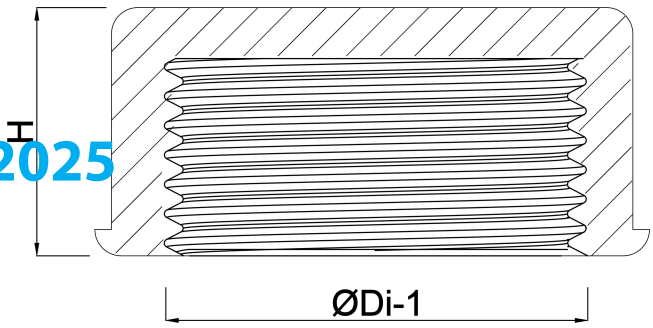

Last modified date: 07/11/2025

Bosta UK Ltd.
Reflection House
Olding Road

bosta
bringing water to life

Bury St. Edmunds
Suffolk
IP33 3TA
T +44 (0) 1284 716580
E enquiries@bosta.co.uk
http://www.bosta.com

bosta
bringing water to life