Profec Nr. 130 T-piece 90° cast iron galvanised 1 1/2" x 1" x 1 1/2" female thread 25bar DVGW (1013038)

PROFEC

bosta
bringing water to life

TECHNICAL SPECIFICATIONS

Material	cast iron
Surface treatment	galvanised
Approval	DVGW
Connection	female thread
Fitting nr.	Nr. 130
Temperature range	-20°C - 120°C
Pressure	25 bar
Size	1 1/2" x 1" x 1 1/2"

DIMENSIONS

L	92 mm
ØDi-1	1 1/2 "
ØDi-2	1 "
ØDi-3	1 1/2 "
F-1	19 mm
F-2	16 mm
F-3	19 mm

Cr-1	46 mm
ß	90 °

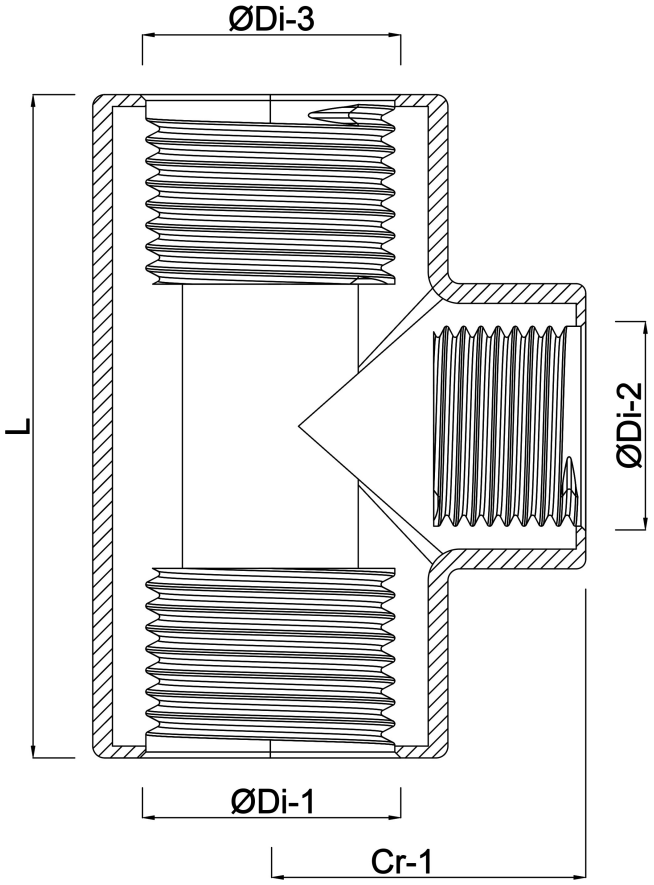

Last modified date: 10/02/2026

Bosta UK Ltd.
Reflection House
Olding Road
Bury St. Edmunds
Suffolk
IP33 3TA
T +44 (0) 1284 716580
E enquiries@bosta.co.uk
http://www.bosta.com

bosta
bringing water to life